Product Code:

LPT2270AS-HS-12-4.0-19-R

RoHS Compliant

Picture:`

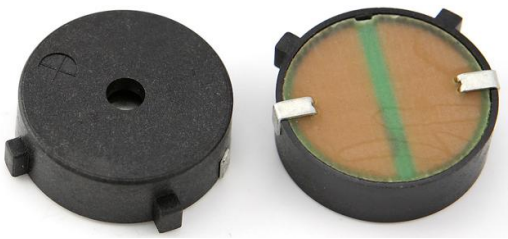

Frequency Response:

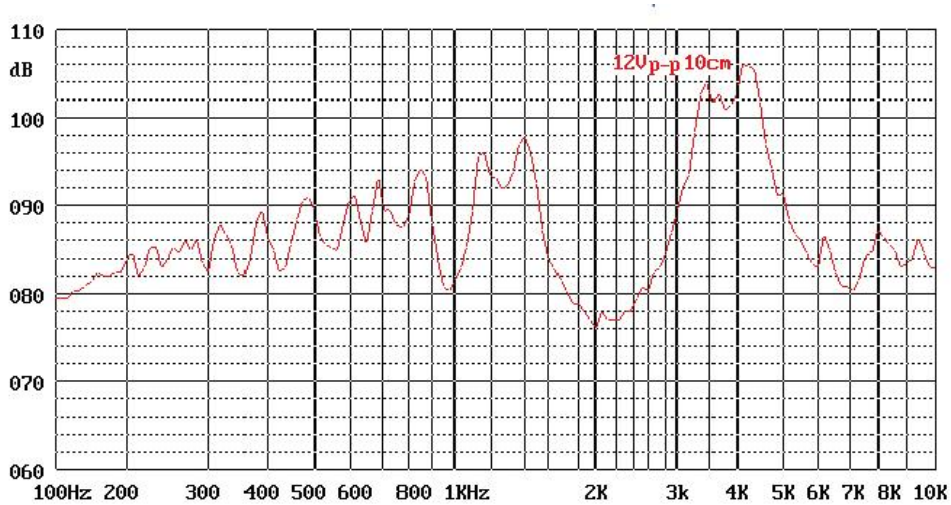

Specification:

Rated Voltage	(Vp-p)	12
Max Input Voltage	(Vp-p)	30
*Rated Current	(mA)	≤12
Capacitance at 100Hz	(pF)	19000±30%
*Sound Output at 10cm	(dB)	≥95
Resonance Frequency	(KHz)	4.0±0.5
Operating Temperature	(℃)	-30～+85
Storage Temperature	(℃)	-40～+90
Weight	(g)	2.3
Housing Material		PPS
RoHS		Yes

*Value applying at rated voltage , 4.0KHz, 1/2 duty , square wave

Test Basic State: Temp(20±2℃),Humidity(40~70%RH),Air pressure(860~1060hPa).

Dimensions (UNIT: mm)
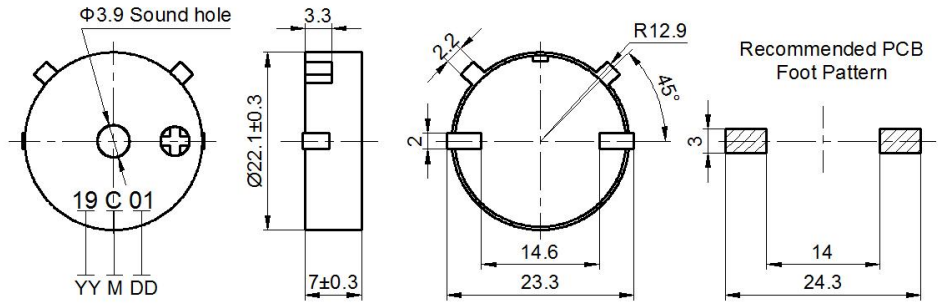
Tolerance: ±0.5mm Except Specified